VANICO MARONYX
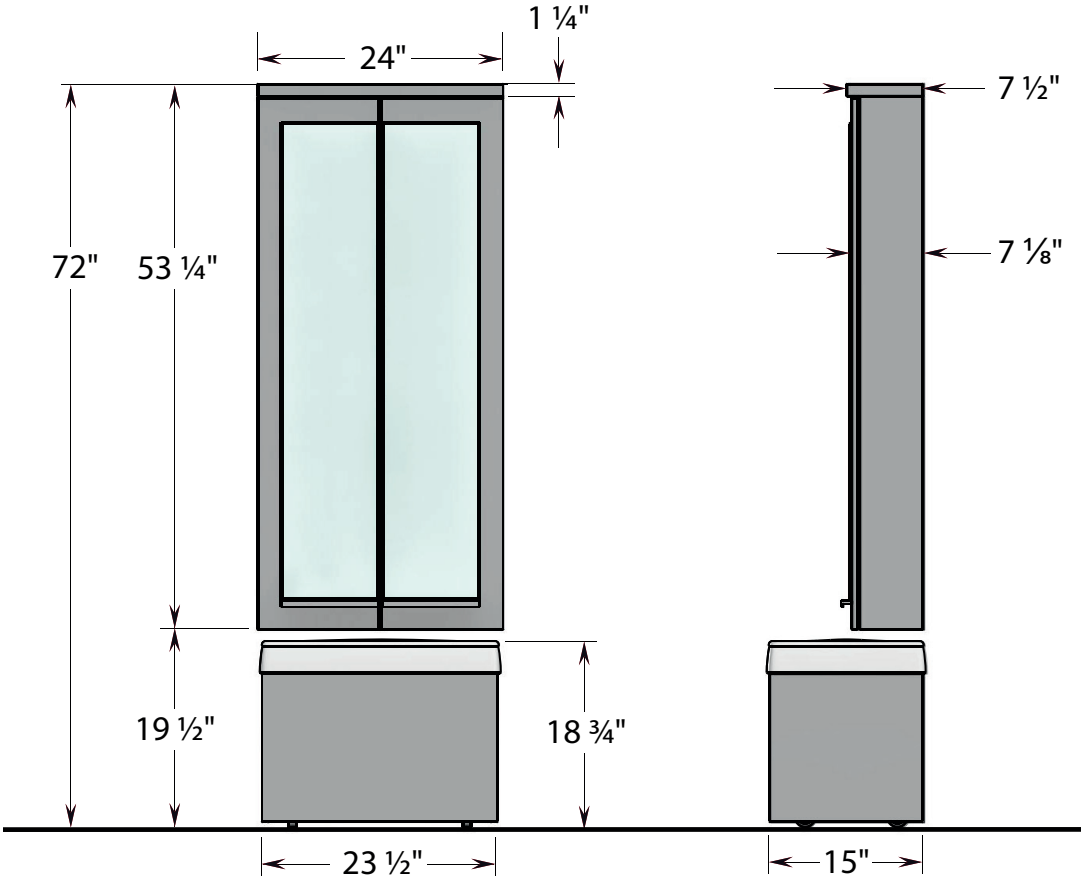
DUO - COMPACT DRESSING TABLE